Note :

1. No visible deformation or defects allowed on the entire part. All burrs and sharp edges must be removed.
2. Threads must be completely free of metal chips and debris. Bolts must engage smoothly with no abnormal resistance or galling.
3. UHV (Ultra-High Vacuum) precision cleaning required. The part must be entirely free of grease, cutting fluids, or any other contaminants.
4. The finished product must be capable of achieving an ultra-high vacuum level of 1×10^{-8} Torr.
5. Flange tightening torque limits: M8 screws shall not exceed 150 kgf-cm; M6 screws shall not exceed 90 kgf-cm.

Rev.	Description	Date
0	NEW RELEASE	2025/06/13
1	新增註解。	2026/09/21
2	DESIGN CHANGE/ NOTE REVISION.	2026/10/21

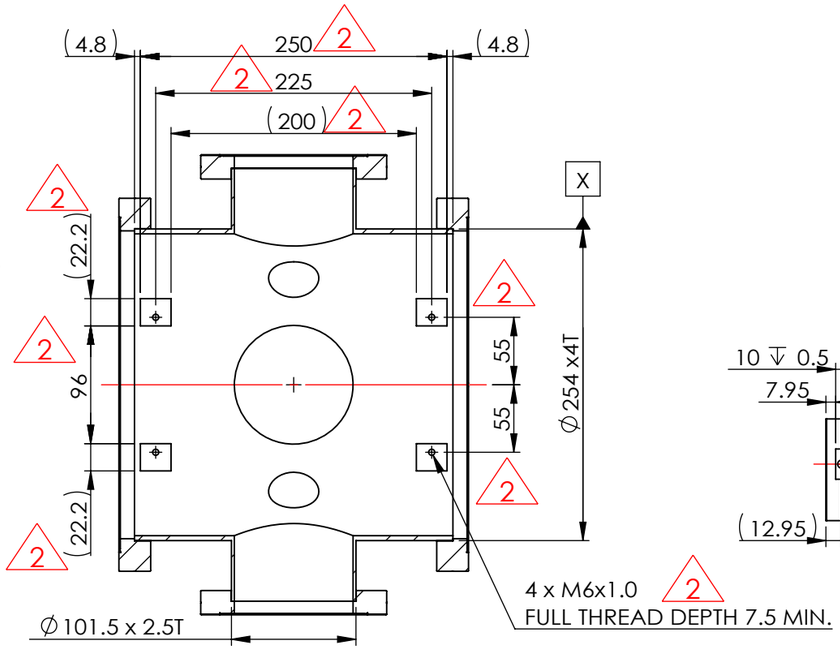

SECTION A-A

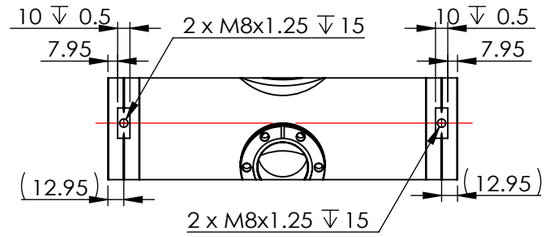

VIEW B-B

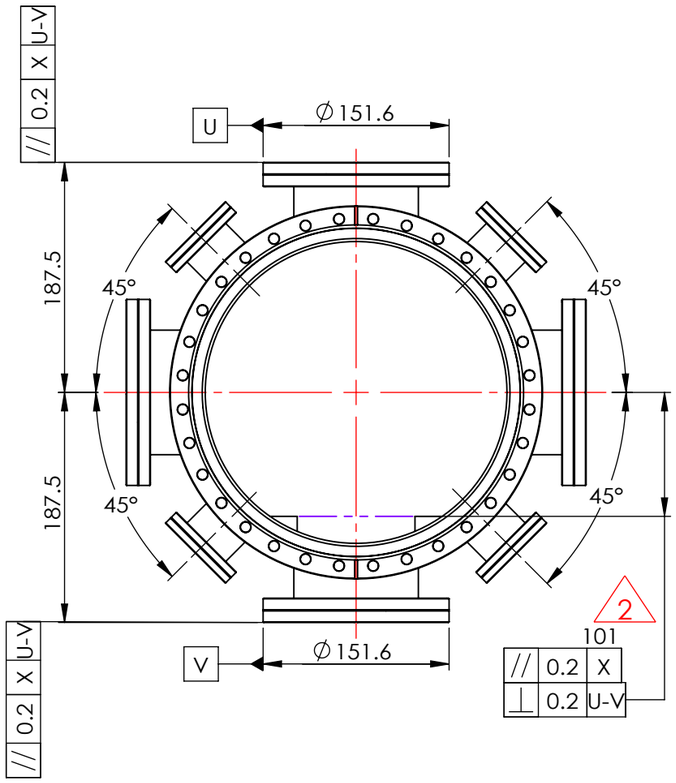

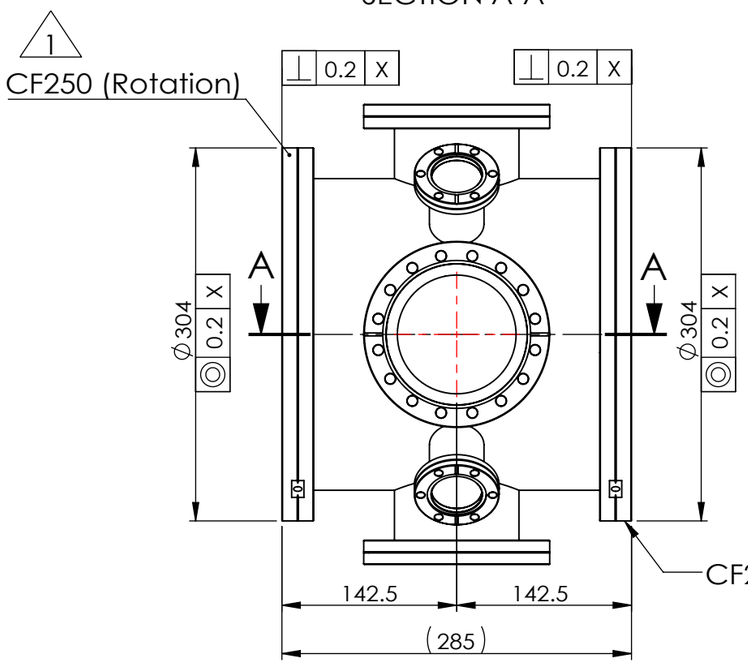

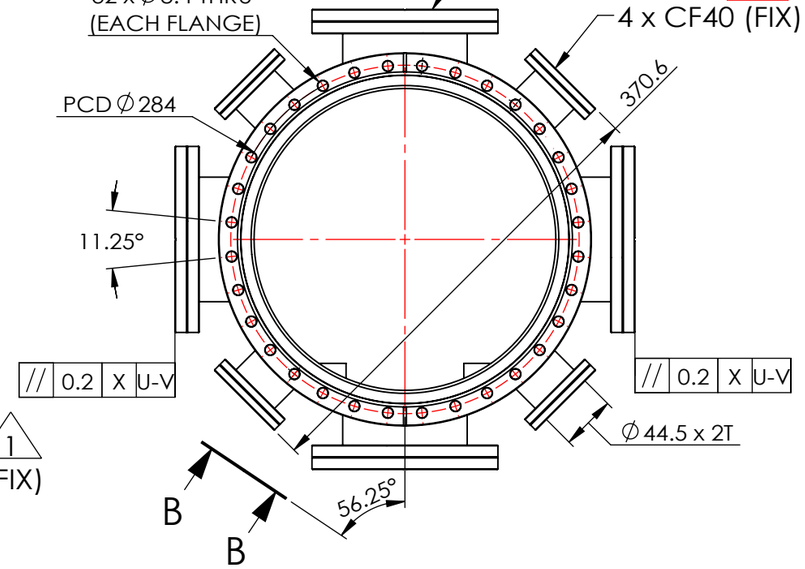

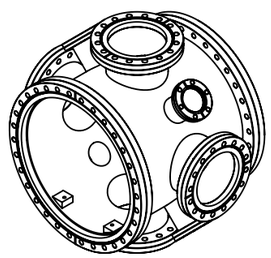

TOLERANCE UNLESS SPECIFIED : DIMENAION ARE IN CNS 4018 (B1037) CLASS 12	National Synchrotron Radiation Research Center			TITLE: Pulse wire chamber_07
	FORMAT: A3			Description:
		NAME	DATE	3D Model: PW_chamber_07 / REV.: 2
UNIT: mm	MATERIAL: SUS316L	DRAWN	H. Chen	2026/10/21
		CHK'D		Conf. Name: 預設 / Author:
	QUANTITY: --	APPV'D		DWG NO.: PW_chamber_v07 / REV.: 2
				Sheet Name:PAGE1 / Sheet:1/1
				PROJECT: / Group: